SenseTronics – Masters in RCC

ST-3010 Radio Controlled clock Signal Generator

Instruction Manual

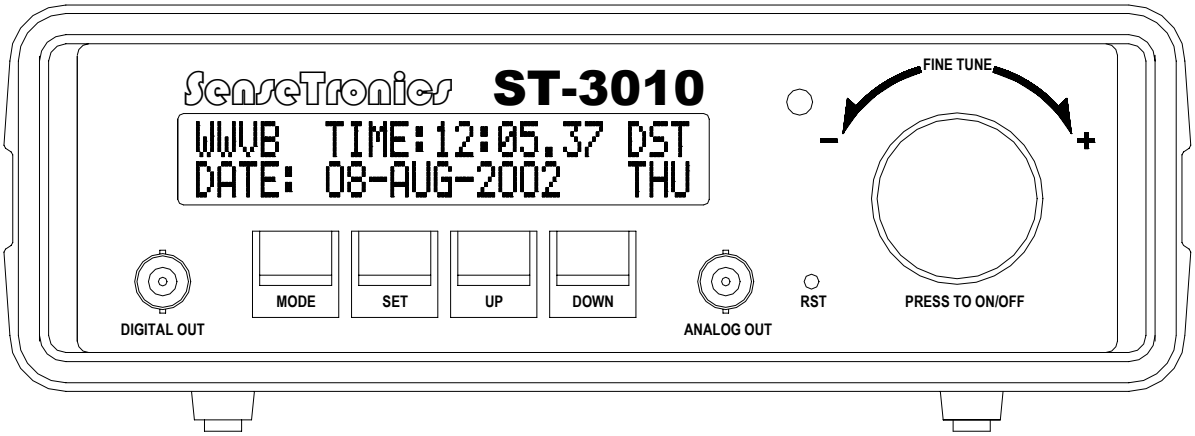

SenseTronics Co. LTD

This specification is subject to change without notice and SenseTronics has no any responsibility and product liability for use of ST-3010

CONTENTS

1. Introduction 3

2. Applications 3

3. Features 3

4. Basic components of ST-3010 4

5. Technical Specifications 5

6. Connecting to power 6

7. Modes and Settings 6

8. Summer time and Winter time setting 7 - 8
   - 8.1 Summer/Winter change in WWVB
   - 8.2 Summer/Winter change in DCF and HBG
   - 8.3 Summer/Winter change in MSF

9. Operating flowcharts of ST-3010 9~14
   - 9.1 WWVB modes and settings
   - 9.2 DCF Modes and Settings
   - 9.3 MSF Modes and Settings
   - 9.4 JJY40 Modes and Settings
   - 9.5 JJY60 Modes and Settings
   - 9.6 HBG Modes and Settings

10. Antenna Connection 15~16
   - 10.1 Setting the output transmission power
   - 10.2 Measuring the sensitivity

11. Protocol details 17~22
   - 11.1 WWVB – Protocol information
   - 11.2 DCF – Protocol information
   - 11.3 MSF – Protocol information
   - 11.4 JJY40 – Protocol information
   - 11.5 JJY60 – Protocol information
   - 11.6 HBG – Protocol information

Introduction

ST-3010 is an equipment which gives a precise time through different time protocol transmissions for engineering design, QC, QA and shielding enclosure testing of Radio Controlled Clocks. This is a user friendly equipment which allows to set required protocols, times setting and other engineering set modes described in later chapters.

Applications

For simulation of radio time signal transmissions of

WWVB – for USA

DCF – for Germany and Central Europe

MSF – For UK

JJY40/JJY60 – for Japan

HBG – For Switzerland and Central Europe

- for engineering designs of radio-controlled clocks
- Testing at production lines
- Sensitivity tests in shielding enclosures

Features

- Mains operated
- Memory backup for setting and continuous accurate clock in power off status
- 50 Ohms analogue output for testing antenna connection
- 24 letters dual line display with LED back light function
- Easy selection of protocols and easy adjustment of parameters
- Internal automatic adjustment of "day of week" from Jan 1st, 2002 to Dec 31st, 2099
- Automatic or manual adjustment of Summer time & Winter time in WWVB, DCF and MSF (User selectable)
- Independent menus for each protocol for setting of special bits
- Easy settings of the sensitivity without using a milli-voltmeter
- Adjustable frequency for manual antenna adjustment

Basic components of ST-3000

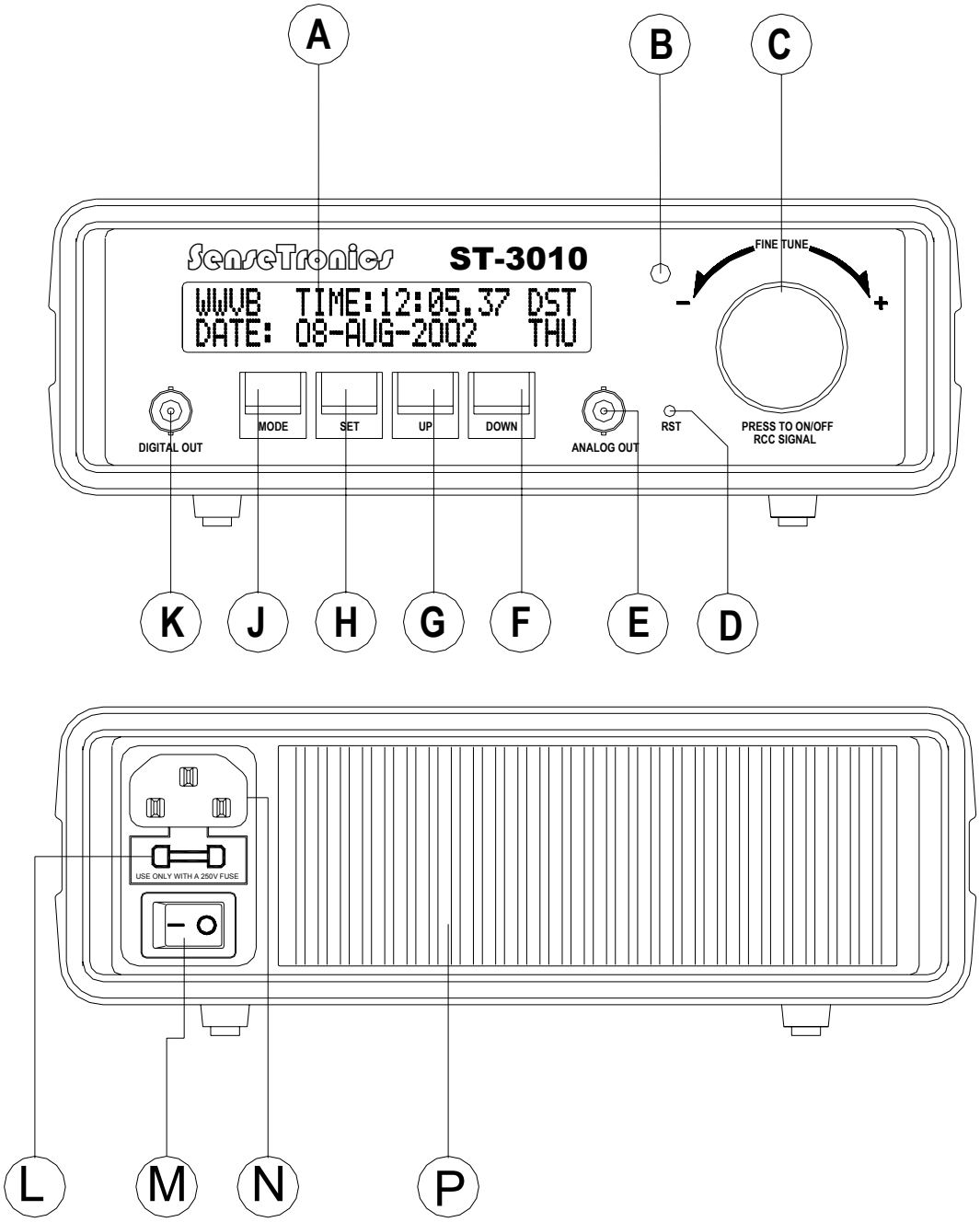

A	24x2 letter LCD display	H	SET key (to enter setting modes)
B	LED indicator for output digital signal	J	MODE key (to enter different display modes)
C	Fine tune Knob / RCC signal on/off	K	Digital output port (BNC)
D	Reset key for signal generator program reset	L	Fuse (use only 250V fuse)
E	Analogue output to 50 Ohms antenna (BNC)	M	Power on off switch
F	DOWN key (to reduce setting values)	N	Socket for power cord
G	UP key (to increase setting values)	P	Heat sink plate for temperature compensate

Technical Specification

Supply Voltage rated at 220V	180V – 240V AC	Note: It is necessary to specify the Rated power supply of your country when you order as the unit comes only with a single power input
Supply Voltage rated at 110V	100V – 120V AC	
Power Consumption	10W (Max)	Minimum can measure up to 3uV/m sensitivity
Carrier output Level	0.03mV – 3V (3uV/m to 300mV/m)	
Output Impedance	50 Ohms	
Carrier Frequency For WWVB For DCF For MSF For JJY40 For JJY60	60KHz +/-2Hz 77.5KHz +/-2Hz 60KHz +/-2Hz 40KHz +/-2Hz 60KHz +/-2Hz	Frequency will be automatically selected with the protocol selection
Modulation	70% for WWVB 75% for DCF 100% for MSF 90% for JJY40 90% for JJY60	Modulation will be automatically selected with the protocol selection
Accuracy of Sensitivity	3uV/m – 30uV/m 31uV/m – 100uV/m 101uV/m – 300uV/m 300uV/m and above	+/-1uV/m +/-2uV/m +/-5uV/m +/-3%
Operating temperature	0° C to 50° C	
Dimension	Casing size	2010mm (W) x 230mm(L) x 80mm(H)
	Antenna	260mm(Diameter) x 140mm(W) x 310mm(H)
Net Weight	4Kg	Including Antenna

Connecting to power

A power cord comes with ST-3010, which used to connect the equipment to mains. Simply inset the correct plug into the socket Ⓛ as shown in the basic component display on page 4.

Plug in the other end of the cord to the mains socket. You have already connected the unit to mains power now.

Simply turn on the power switch at the back of the ST-3010. Now the equipment is ready to work.

Modes and settings

There are 4 modes in each protocol.
Mode 1: Normal operation mode
Mode 2: Output level adjustment mode
Mode 3: Frequency adjustment mode
Mode 4: Special bits display mode

Mode 1: Normal operation mode

W	W	V	B			T	I	M	E	:	1	2	:	3	0	.	0	0		S	T	D	
D	A	T	E	:		0	1	-	J	A	N	-	2	0	0	2				T	U	E	

In this mode operator can see the protocol, time in 24 hour format, DST or standard status and date in day-month-year and day of week.

Press SET key will make the protocol display to blink. Use UP/DOWN keys or use Fine Tune Knob will change the protocol type from WWVB, MSF, DCF77, JJY60 and JJY40.

After selecting the protocol another press on SET key will switch the setting to Hour setting and the Hour digits will blink. Each press on SET key after that will move the setting to minutes setting, seconds reset, DST setting Day setting, month setting and year setting. UP/DOWN keys or Fine Tune Knob are used set required values for currently blinking parameter.

Mode 2: Output level adjustment mode

W	W	V	B			T	I	M	E	:	1	2	:	3	0	.	0	0		S	T	D	
O	U	T	P	U	T		L	E	V	E	L	:			X	X	X	u	V	/	m		

In this mode operator can see the sensitivity of the position that is to test the RCC products. Please see page 8 for more details about this position. Press SET will make the Output Level data to blink and can use UP/DOWN keys or use Fine tune Knob to set the value required.

Mode 3: Frequency Adjustment mode

W	W	V	B			T	I	M	E	:	1	2	:	3	0	.	0	0		S	T	D	
F	R	E	Q	U	E	N	C	Y	:		X	X	,	X	X	X	H	Z					

This mode mainly used to do the antenna adjustment. To make use of this mode it is necessary to turn off the RCC signal by pressing Fine Tune Knob (RCC Signal on/off). If the RCC signal is turned off the blinking LED indicator will stop. To turn on the RCC signal, press Fine Tune Knob once again. This will make the LED indicator to blink.

Mode 4: Special bits display mode

W	W	V	B			S	P	E	C	I	A	L		B	I	T	S						
L	Y	:	0		L	S	:	0		S	U	1	:	0		S	U	2	:	0			

M	S	F				S	P	E	C	I	A	L		B	I	T	S						
P	_	S	U	M	:	0		S	U	M	:	0		D	U	T	:	3	0	0	m	S	

D	C	F				S	P	E	C	I	A	L		B	I	T	S						
R	A	:	0		A	:	0		Z	1	:	0		Z	2	:	1		L	S	:	0	

J	J	Y	4	0		S	P	E	C	I	A	L		B	I	T	S						
S	U	1	:	0		S	U:	2	:	0		L	S	1	:	0		L	S	2	:	0	

J	J	Y	6	0		S	P	E	C	I	A	L		B	I	T	S						
L	Y	:	0		L	S	:	0		S	U	1	:	0		S	U	2	:	0			

H	B	G				S	P	E	C	I	A	L		B	I	T	S						
R	A	:	0		A	:	0		Z	1	:	0		Z	2	:	1		L	S	:	0	

Special bits are normally the parity bits, Leap year, Leap second and DST bits. In MSF protocol there is another special bit set mode, which can be used to select 100mS and extended 100mS pulses, which shows the DUT codes format (DUT codes is the same type of codes as UT1 in WWVB. These code value setting is not available in this equipment). For JJY40 and JJY60 SU1, SU2, LS1, LS2 can set but it is not in proper use in JJY time so it should be neglected in software development for the time being.

Summer time and winter time setting

Currently, in WWVB, MSF, DCF77 and HBG according to the country standard timing system there is a change of time from summer to winter and winter to summer.

In USA generally on the first Sunday of April at 2:00am add one hour. So the time will become 3:00am. This new time is called DST (Daylight Saving Time). And on the last Sunday in October at 2:00am deduct one hour from the current time. So the time will become 1:00am. Transmitting time will be UTC and will not change at DST or STD change. At 0:00 hours in UTC time on first

Sunday in April, bit57 (SU1) will set to 1. After 24 hours from that bit58 (SU2) will also set to 1. In the same manner at 0:00 hours in UTC time on last Sunday in October, bit57 (SU1) will reset to 0 and after 24 hours bit58 (SU2) will also reset to 0. In ST-3010 operator can select the DST, DST- (DST to STD changeover time), STD, STD+ (Standard to DST changeover time) and AUTO. If select AUTO then SUM1 and SUM2 will automatically set with the calendar date. This function is useful in the production to set the clock time to correct USA time before the shipment.

In UK on last Sunday of March at 1:00am one hour will add to the current time. So the active time will become 2:00am (DST). On last Sunday in October at 2:00am an hour will be deducted from the current time. So the active time will become 1:00am. In MSF protocol on last Saturday in March at 23:59 hours in the transmission time bit53 (P_SUM) will set to 1. Exactly at 1:00am on the next morning transmission time will set to 2:00am and bit53 (P_SUM1) will reset to 0 and at the same time bit58 (SUM) will set to 1. This means the summer time is active. On last Sunday in October at 1:59am bit53 (P_SUM) will set to 1. Exactly at 2:00am the transmission time will be set to 1:00am and bit53 (P_SUM) will reset to 0 and at the same time bit58 (SUM) will also reset to 0.

In Central Europe on last Sunday in March at 2:00am one hour will add to the current time. So the active time will become 3:00am (DST). On last Sunday in October at 3:00am an hour will be deducted from the current time. So the active time will become 2:00am. In DCF77 and HBG protocols, on last Saturday in March at 0:59 hours in the transmission time bit16 (A) will set to 1. Exactly at 2:00am on the transmission time will set to 3:00am and bit16 (A) will reset to 0 and at the same time bit17 (S) will set to 1 and bit18 (W) will reset to 0. This means the summer time is active. On last Sunday in October at 1:59am bit16 (A) will set to 1. Exactly at 3:00am the transmission time will be set to 2:00am and bit16 (A) will reset to 0 and at the same time bit17 (S) will reset to 0 and bit18 (W) will set to 1.

In Japan the summer time concept is currently not available but in JJY protocol bit38 (SU1) and bit40 (SU2) is reserved for implementing DST function for future use. For more detail please see protocol data from page 11 to 14.

If user set DST or STD on the LCD in first display mode to AUTO, the display will show S to show Standard time and show D to show DST time. During the automatic changeover of S to D the display will show S+ and from D to S it will show D-.

Please see next page for operating flowcharts ST-3010.

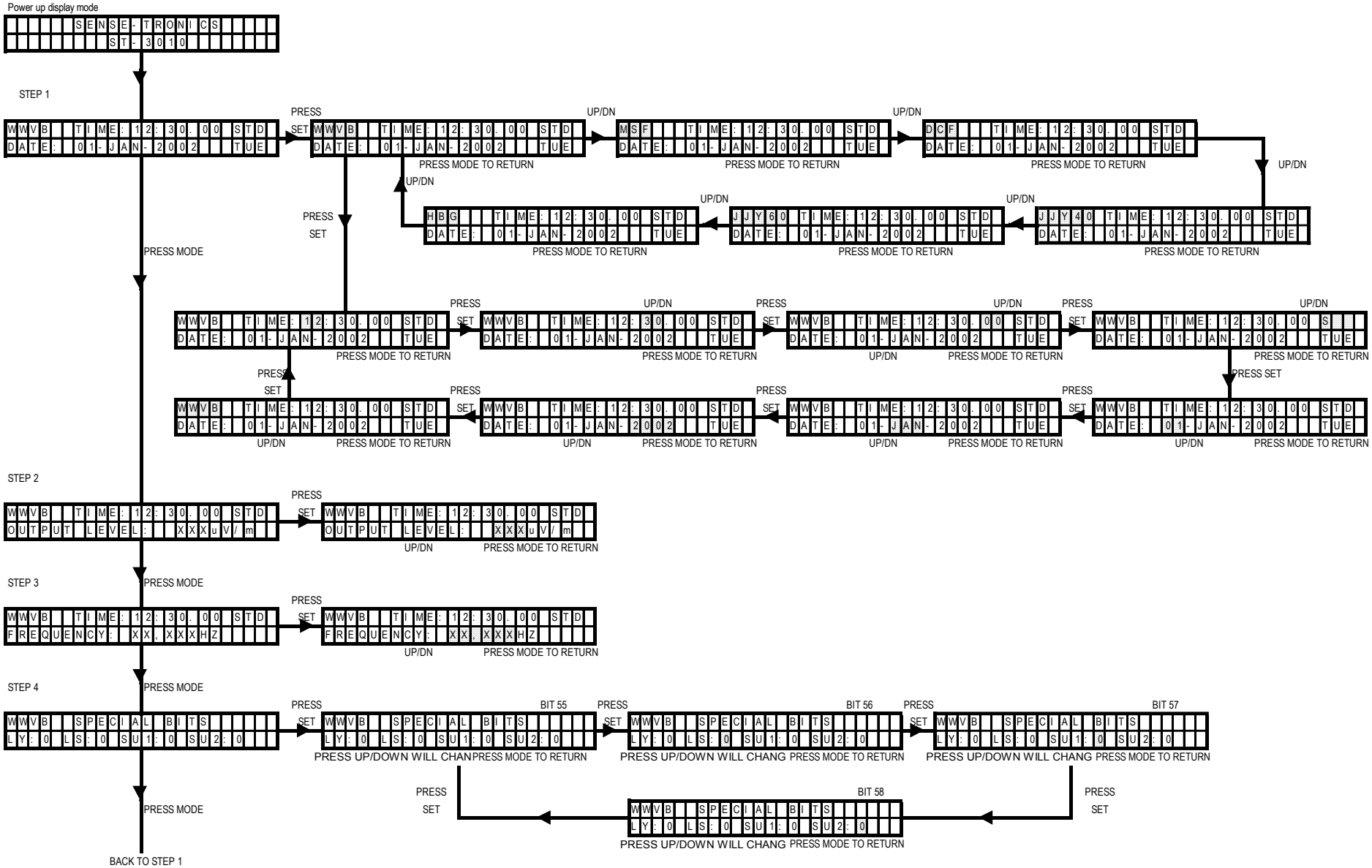
Power up display mode
SENSE-TRONICS
ST-3010
STEP 1
WWVB TIME:12:30.00 STD
DATE: 01-JAN-2002 TUE
PRESS SET
PRESS MODE TO RETURN
UP/DN
MSF TIME:12:30.00 STD
DCF TIME:12:30.00 STD
HBG TIME:12:30.00 STD
JJY60 TIME:12:30.00 STD
JJY40 TIME:12:30.00 STD
PRESS MODE
PRESS SET
STEP 2
OUTPUT LEVEL: XXXuV/m
STEP 3
FREQUENCY: XX.XXXHZ
STEP 4
SPECIAL BITS
LY:0 LS:0 SU1:0 SU2:0
BIT 55
BIT 56
BIT 57
BIT 58
PRESS UP/DOWN WILL CHANG
BACK TO STEP 1

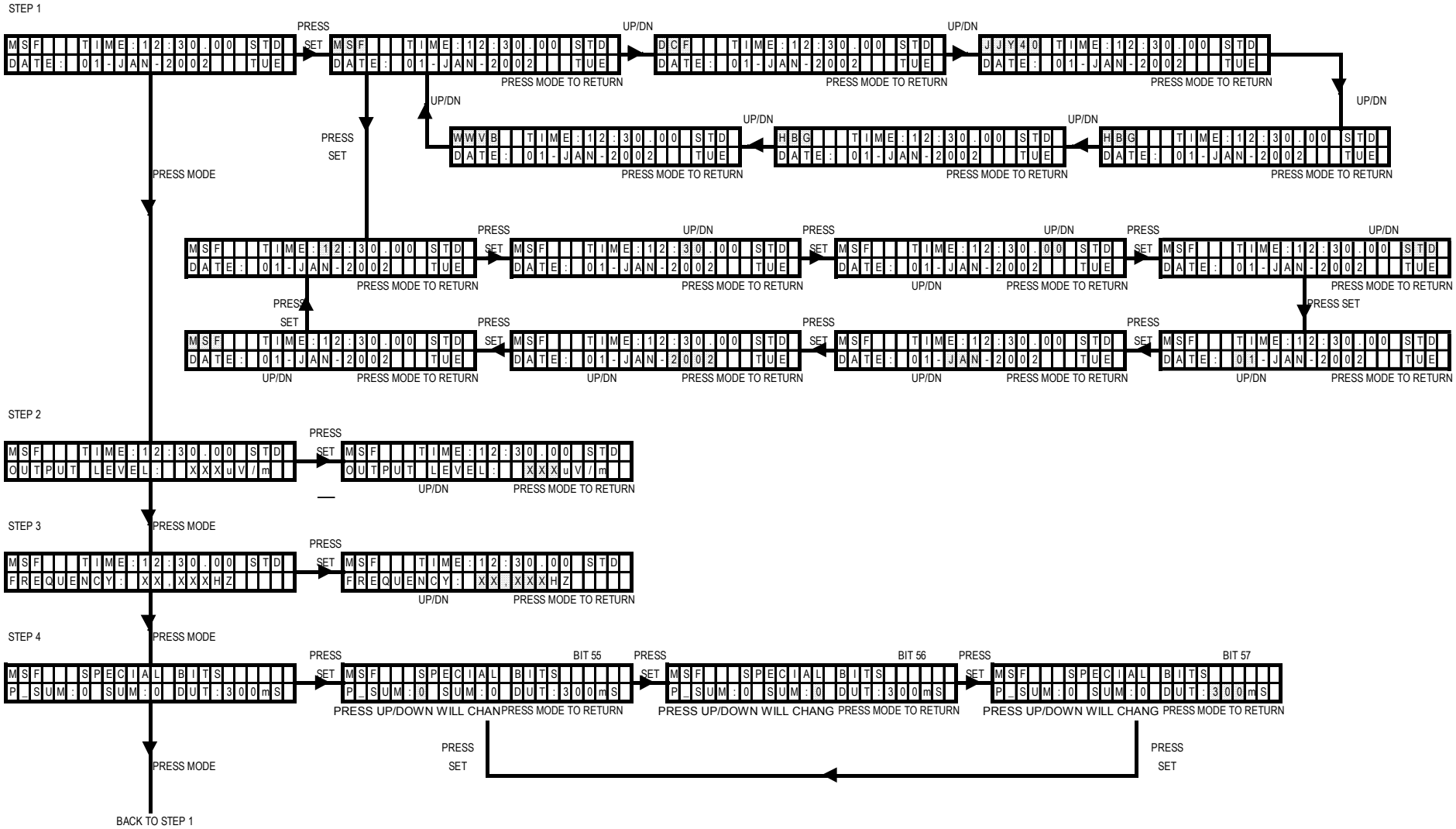
STEP 1
MSF TIME:12:30.00 STD
DATE: 01-JAN-2002 TUE
PRESS SET
PRESS MODE TO RETURN
UP/DN
DCF TIME:12:30.00 STD
JJY40 TIME:12:30.00 STD
WWVB TIME:12:30.00 STD
HBG TIME:12:30.00 STD
PRESS MODE
PRESS SET
PRESS SET
STEP 2
OUTPUT LEVEL: XXXuV/m
STEP 3
FREQUENCY: XX.XXXHZ
STEP 4
MSF SPECIAL BITS
P_SUM:0 SUM:0 DUT:300mS
BIT 55
BIT 56
BIT 57
PRESS UP/DOWN WILL CHANG
PRESS MODE
BACK TO STEP 1

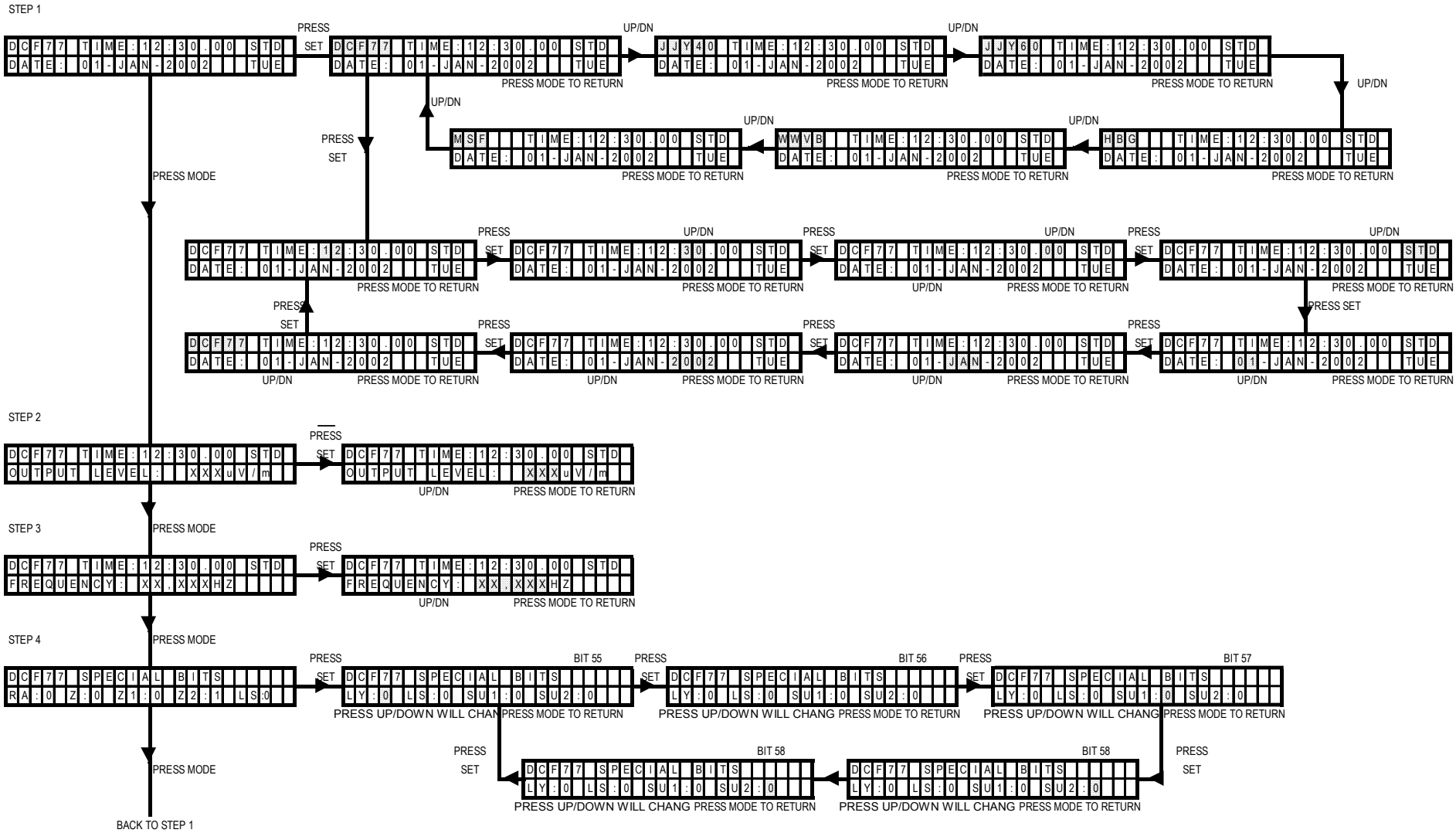
STEP 1
DCF77 TIME:12:30.00 STD
DATE: 01-JAN-2002 TUE
PRESS SET
PRESS MODE TO RETURN
UP/DN
JJY40 TIME:12:30.00 STD
JJY60 TIME:12:30.00 STD
MSF TIME:12:30.00 STD
WWVB TIME:12:30.00 STD
HBG TIME:12:30.00 STD
PRESS MODE
PRESS SET
STEP 2
OUTPUT LEVEL: XXXuV/m
STEP 3
FREQUENCY: XX.XXXHZ
STEP 4
SPECIAL BITS
RA:0 Z:0 Z1:0 Z2:1 LS:0
LY:0 LS:0 SU1:0 SU2:0
BIT 55
BIT 56
BIT 57
BIT 58
PRESS UP/DOWN WILL CHANG
BACK TO STEP 1

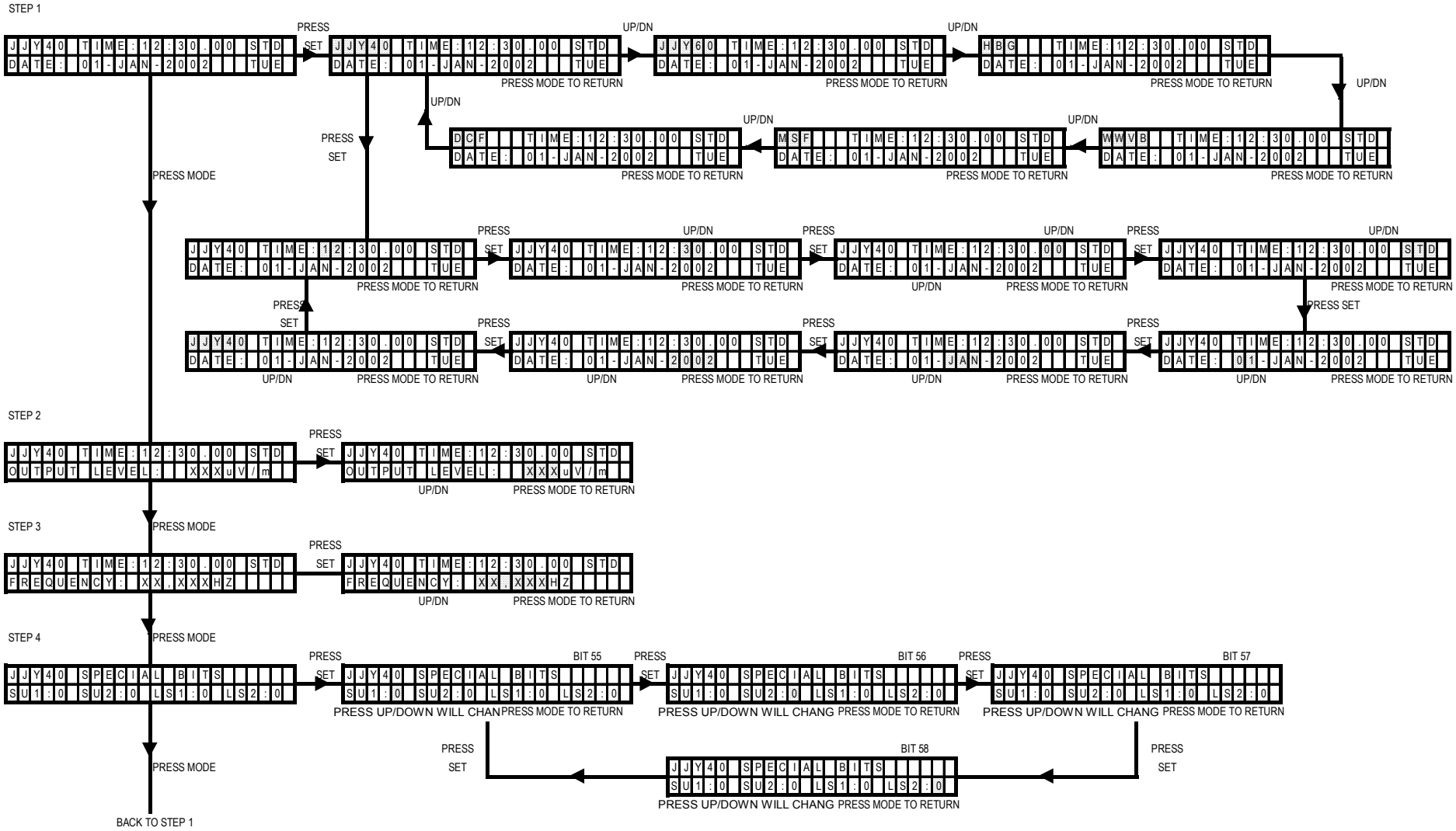
STEP 1
JJY40 TIME:12:30.00 STD
DATE: 01-JAN-2002 TUE
PRESS SET
JJY60 TIME:12:30.00 STD
HBG TIME:12:30.00 STD
DCF TIME:12:30.00 STD
MSF TIME:12:30.00 STD
WWVB TIME:12:30.00 STD
UP/DN
PRESS MODE TO RETURN
PRESS MODE
STEP 2
OUTPUT LEVEL: XXXuV/m
STEP 3
FREQUENCY: XX.XXXHZ
STEP 4
SPECIAL BITS
SU1:0 SU2:0 LS1:0 LS2:0
BIT 55
BIT 56
BIT 57
BIT 58
PRESS UP/DOWN WILL CHANG
BACK TO STEP 1

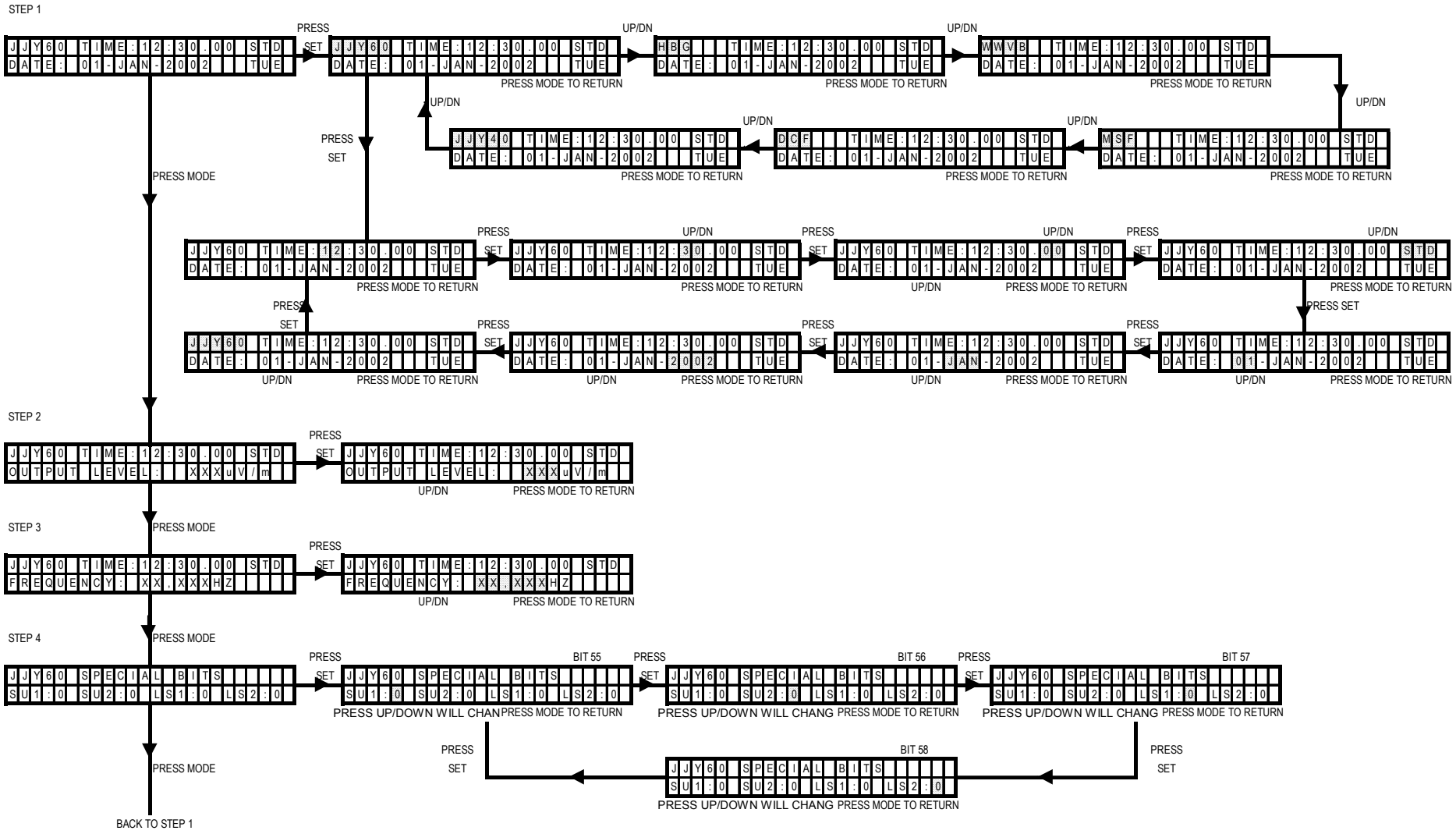
STEP 1
JJY60 TIME:12:30.00 STD
DATE: 01-JAN-2002 TUE
PRESS SET
JJY60 TIME:12:30.00 STD
DATE: 01-JAN-2002 TUE
PRESS MODE TO RETURN
UP/DN
HBG TIME:12:30.00 STD
DATE: 01-JAN-2002 TUE
PRESS MODE TO RETURN
UP/DN
WWVB TIME:12:30.00 STD
DATE: 01-JAN-2002 TUE
PRESS MODE TO RETURN
UP/DN
MSF TIME:12:30.00 STD
DATE: 01-JAN-2002 TUE
PRESS MODE TO RETURN
UP/DN
DCF TIME:12:30.00 STD
DATE: 01-JAN-2002 TUE
PRESS MODE TO RETURN
UP/DN
JJY40 TIME:12:30.00 STD
DATE: 01-JAN-2002 TUE
PRESS MODE TO RETURN
UP/DN
PRESS SET
PRESS MODE
PRESS SET
UP/DN
PRESS MODE TO RETURN
PRESS SET
STEP 2
OUTPUT LEVEL: XXXuV/m
STEP 3
FREQUENCY: XX.XXXHZ
STEP 4
SPECIAL BITS
SU1:0 SU2:0 LS1:0 LS2:0
BIT 55
BIT 56
BIT 57
BIT 58
PRESS UP/DOWN WILL CHANG
BACK TO STEP 1

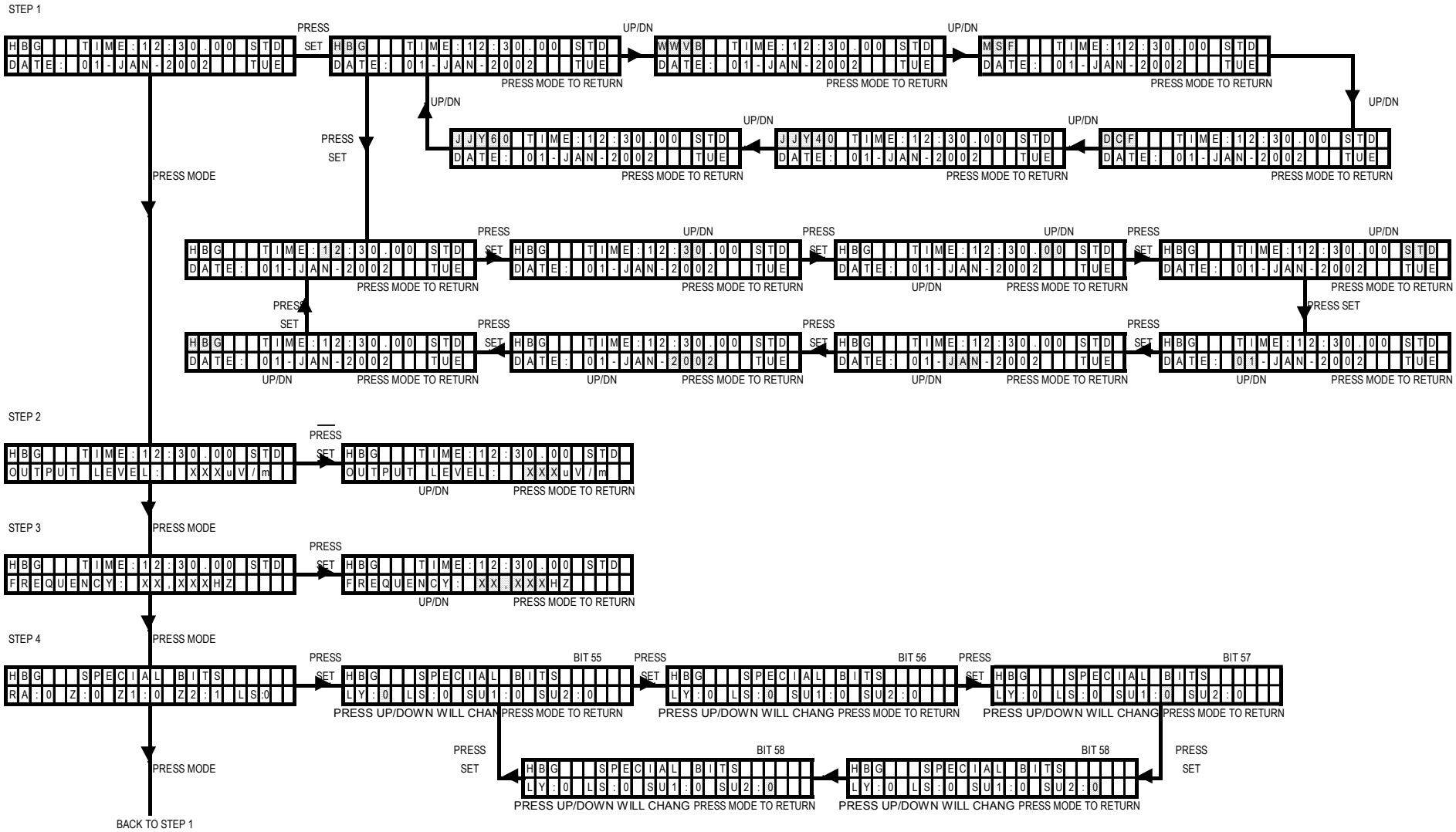
STEP 1
HBG TIME:12:30.00 STD
DATE: 01-JAN-2002 TUE
PRESS SET
PRESS MODE TO RETURN
UP/DN
WWVB TIME:12:30.00 STD
MSF TIME:12:30.00 STD
JJY60 TIME:12:30.00 STD
JJY40 TIME:12:30.00 STD
DCF TIME:12:30.00 STD
PRESS MODE
PRESS SET
STEP 2
OUTPUT LEVEL: XXXuV/m
STEP 3
FREQUENCY: XX.XXXHZ
STEP 4
SPECIAL BITS
RA:0 Z:0 Z1:0 Z2:1 LS:0
LY:0 LS:0 SU1:0 SU2:0
BIT 55
BIT 56
BIT 57
BIT 58
PRESS UP/DOWN WILL CHANG
BACK TO STEP 1

Antenna Connection

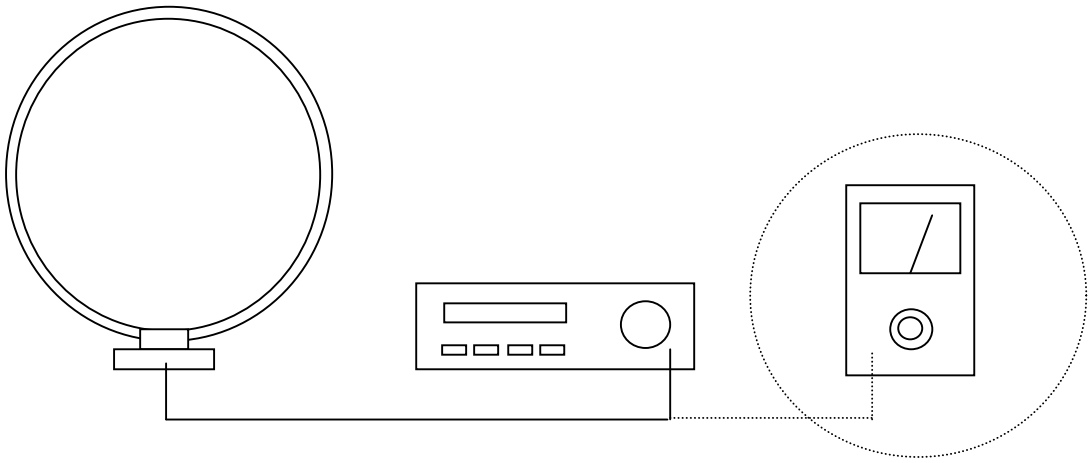

Connect only for calibration

Setting the output transmission power

ST-3010 is a user friendly equipment which can show the accurate sensitivity of the product that is under testing at a distance of 476mm away from the center of the loop antenna. See the positioning of the loop antenna and the unit under test in below paragraph “Measuring the sensitivity”. If necessary for calibration purposes operator can connect an external AC voltmeter meter as shown in above figure to see the accuracy. If ST-3010 is using with the loop antenna comes with the equipment then it is not necessary to use an external AC voltmeter to see the sensitivity and the sensitivity is the exact value that you can see on the display. Operator can set the sensitivity level by using the steps described under section “Modes and Settings”. It is not necessary to care about the antenna factor during the sensitivity settings. But if you use an AC voltmeter then the displayed sensitivity on ST-3010 has to be multiplied by the antenna factor and adjust the level to match the reading on the AC voltmeter. ST-3010 with the antenna connected can adjust the sensitivity level down to 3uV/m. Antenna factor “K” of the antenna comes with ST-3010 is K=10.

Measuring the sensitivity

To measure the sensitivity it is necessary to do the setup according to the following drawing.

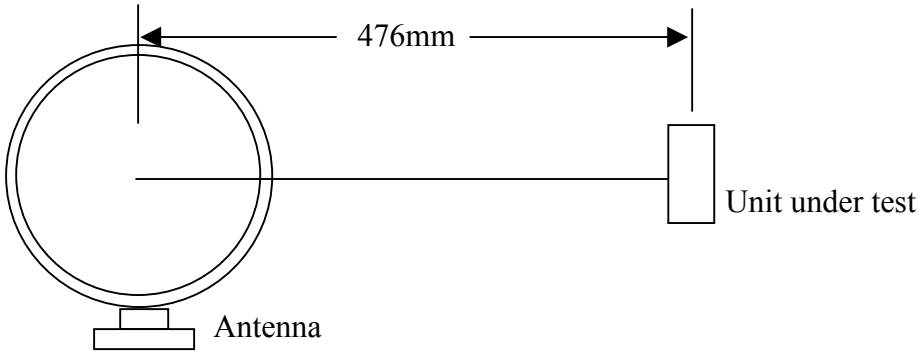

To test the sensitivity, clock should be placed at a distance of 476mm from the center of the antenna. Center axis of the Antenna of the clock should be parallel to the center axis of the transmitting antenna. To test 20uV/m sensitivity simply set the Output Level on the ST-3010 display to 20uV/m.

ST-3010 also can be used to adjust the RCC receiving antennas manually with using an oscilloscope.

Protocol : WWVB

Position : Ft. Collins, Colorado, USA
Carrier Frequency : 60kHz
Modulation : 69%

Transmit Power : 40kW
Geo. Coordination : 40° 40'N, 105° 03'W

Logic Zero : 200mS
Logic One : 500mS
Marker Bits : 800mS

Permanent Transmission

0	1	2	3	4	5	6	7	8	9	10	11	12	13	14	15	16	17	18	19	20	21	22	23	24	25	26	27	28	29
Marker Bit	40 Minutes	20 Minutes	10 Minutes	Always 0	8 Minutes	4 Minutes	2 Minutes	1 Minute	Marker Bit	Always 0	Always 0	20 Hours	10 Hours	Always 0	8 Hours	4 Hours	2 Hours	1 Hour	Marker Bit	Always 0	Always 0	200 Days	100 Days	Always 0	80 Days	40 Days	20 Days	1 Days	Marker Bit
800	200	200	200	200	200	200	200	200	800	200	200	200	200	200	200	200	200	200	800	200	200	200	200	200	200	200	200	200	800
	500	500	500		500	500	500	500				500	500		500	500	500	500				500	500		500	500	500	500	

30	31	32	33	34	35	36	37	38	39	40	41	42	43	44	45	46	47	48	49	50	51	52	53	54	55	56	57	58	59
8 Days	4 Days	2 Days	1 Day	Always 0	Always 0	Uta	UTs	Uta	Marker Bit	800mS	400mS	200mS	100mS	Always 0	80 Years	40 Years	20 Years	10 Years	Marker Bit	8 Year	4 Year	2 Year	1 Year	Always 0	Leap Year	Leap Second	DST Bit 1	DST Bit 2	Marker Bit
200	200	200	200	200	200	200	200	200	800	200	200	200	200	200	200	200	200	200	800	200	200	200	200	200	200	200	200	200	800
500	500	500	500		500	500	500	500		500	500	500	500		500	500	500	500		500	500	500	500		500	500	500	500	

Summer Winter Changeover

DST Bit1	DST Bit2	Description
0	0	Standard time is active
1	0	Day before the DST to Standard time switchover in UTC time
1	1	Daylight saving time is active
0	1	Day before the Standard time to DST switchover in UTC time

For more details contact:
Time and Frequency Division – 847.00,
National institute of Standards and Technology,
325 Broadway, Boulder, Colorado 80303, USA
http://www.boulder.nist.gov/timefreq/stations/wwvb.htm

Protocol : DCF

Position : Mainflingen, Frankfurt, Germany
Carrier Frequency : 77.5kHz
Modulation : 75%
Transmit Power : 50kW
Geo. Coordination : 50° 01'N, 09° 00'E

Logic Zero : 100mS
Logic One : 200mS
Marker Bit : 000mS

Permanent Transmission

0	1	2	3	4	5	6	7	8	9	10	11	12	13	14	15	16	17	18	19	20	21	22	23	24	25	26	27	28	29
Reserved	Reserved	Reserved	Reserved	Reserved	Reserved	Reserved	Reserved	Reserved	Reserved	Reserved	Reserved	Reserved	Reserved	Reserved	Rev. Antenna	DST Changeover	DST identity	Winter identity	Leap Second	Starting Bit	1 Minute	2 Minutes	4 Minutes	8 Minutes	10 Minutes	20 Minutes	40 Minutes	Minutes 0 Parity	1 Hour
100	100	100	100	100	100	100	100	100	100	100	100	100	100	100	100	100	100	100	100	200	100	100	100	100	100	100	100	100	100
															200	200	200	200	200		200	200	200	200	200	200	200	200	200

30	31	32	33	34	35	36	37	38	39	40	41	42	43	44	45	46	47	48	49	50	51	52	53	54	55	56	57	58	59
2 Hours	4 Hours	8 Hours	10 Hours	20 Hours	Hours 0 Parity	1 Day	2 Days	4 Days	8 Days	10 Days	20 Days	Day of week 1	Day of week 2	Day of week 4	1 Month	2 Months	4 Months	8 Months	10 Months	1 Year	2 Years	4 Years	8 Years	10Years	20 Years	40 Years	80 Years	Parity Day, DoW & Month	Marker Bit
100	100	100	100	100	100	100	100	100	100	100	100	100	100	100	100	100	100	100	100	100	100	100	100	100	100	100	100	100	000
200	200	200	200	200	200	200	200	200	200	200	200	200	200	200	200	200	200	200	200	200	200	200	200	200	200	200	200	200	

Summer Winter Changeover

Bit 16	Bit 17	Bit2 18	Description
0	0	1	Standard time is active (winter time)
1	0	1	Hour before DST to Standard time switchover
0	1	0	Daylight saving time is active
1	1	0	Hour before Standard time to DST switchover

For more details contact:
Physikalisch-Technische Bundesanstalt, Lab. Zeiteinheit,
Bundesallee 100, W – 38116,
Braunshweig, Germany
http://www.ptb.de/en/index.html

Protocol : MSF

Position : Rugby, United Kingdom
Carrier Frequency : 60kHz
Modulation : 100%
Transmit Power : 30kW
Geo. Coordination : 52° 22'N, 01° 11'W

Logic Zero : 100mS
Logic One : 200mS
UTI -800 ~+800 : 100mS+100mS
Special Logic One : 300mS
Marker Bit : 500mS

Permanent Transmission Except on 1st Tuesday of the month

0	1	2	3	4	5	6	7	8	9	10	11	12	13	14	15	16	17	18	19	20	21	22	23	24	25	26	27	28	29
Marker Bit	UTI +100	UTI +200	UTI +300	UTI +400	UTI +500	UTI +600	UTI +700	UTI +800	UTI -100	UTI -200	UTI -300	UTI -400	UTI -500	UTI -600	UTI -700	UTI –800	80 Years	40 Years	20 Years	10 Years	8 Years	4 Years	2 Years	1 Year	10 Months	8 Months	4 Months	2 Months	1 Month
500	100	100	100	100	100	100	100	100	100	100	100	100	100	100	100	100	100	100	100	100	100	100	100	100	100	100	100	100	100
	+1	+1	+1	+1	+1	+1	+1	+1	+1	+1	+1	+1	+1	+1	+1	+1	200	200	200	200	200	200	200	200	200	200	200	200	200

30	31	32	33	34	35	36	37	38	39	40	41	42	43	44	45	46	47	48	49	50	51	52	53	54	55	56	57	58	59
20 Days	10 Days	8 Days	4 Days	2 Days	1 Days	Day of week 4	Day of week 2	Day of week 1	20 Hours	10 Hours	8 Hours	4 Hours	2 Hours	1 Hour	40 Minutes	20 Minutes	10 Minutes	8 Minutes	4 Minutes	2 Minutes	1 Minute	Always 0	DST changeover	Parity of Year	Parity of day + month	Parity of Day of week	Parity of Hour + Min	DST\Standard	Always 1
100	100	100	100	100	100	100	100	100	100	100	100	100	100	100	100	100	100	100	100	100	100	100	200	200	200	200	200	200	200
200	200	200	200	200	200	200	200	200	200	200	200	200	200	200	200	200	200	200	200	200	200		300	300	300	300	300	300	

Summer Winter Changeover

DST Bit1	DST Bit2	Description
0	0	Standard time is in effect
1	0	Day before the DST to Standard time switchover in UTC time
1	1	Daylight saving time is in effect
0	1	Day before the Standard time to DST switchover in UTC time

For more details contact:
Time and Frequency Services,
National Physical Laboratory,
Teddington, Middlesex, United Kingdom, TW11 0LW
http://www.npl.co.uk/npl/ctm/index.html

Protocol : JJY40

Position : Miyakoji Vil. Fukushima Pref. Japan
Carrier Frequency : 40kHz
Modulation : 90%
Transmit Power : 50kW at 25% efficiency
Geo. Coordination : 37° 22'N, 140° 51'E

Logic Zero : 200mS
Logic One : 500mS
Marker Bits : 800mS

Permanent Transmission

0	1	2	3	4	5	6	7	8	9	10	11	12	13	14	15	16	17	18	19	20	21	22	23	24	25	26	27	28	29
Marker Bit	40 Minutes	20 Minutes	10 Minutes	Always 0	8 Minutes	4 Minutes	2 Minutes	1 Minute	Marker Bit	Always 0	Always 0	20 Hours	10 Hours	Always 0	8 Hours	4 Hours	2 Hours	1 Hour	Marker Bit	Always 0	Always 0	200 Days	100 Days	Always 0	80 Days	40 Days	20 Days	1 Days	Marker Bit
800	200	200	200	200	200	200	200	200	800	200	200	200	200	200	200	200	200	200	800	200	200	200	200	200	200	200	200	200	800
	500	500	500		500	500	500	500				500	500		500	500	500	500				500	500		500	500	500	500	

30	31	32	33	34	35	36	37	38	39	40	41	42	43	44	45	46	47	48	49	50	51	52	53	54	55	56	57	58	59
8 Days	4 Days	2 Days	1 Day	Always 0	Always 0	Even Parity of Hour	Even Parity of Minutes	DST bit1	Marker Bit	DST Bit 2	80 Years	40 Years	20 Years	10 Years	8 Years	4 Years	2 Years	1 Year	Marker Bit	Day of week 4	Day of week 2	Day of week 1	Leap sec. info	Leap sec. info	Reserved	Reserved	Reserved	Reserved	Marker Bit
200	200	200	200	200	200	200	200	200	800	200	200	200	200	200	200	200	200	200	800	200	200	200	200	200	200	200	200	200	800
500	500	500	500		500	500	500	500		500	500	500	500	500	500	500	500	500		500	500	500	500		500	500	500	500	

Summer Winter Changeover

DST Bit1	DST Bit2	Description
0	0	Standard time is active
1	0	DST to Standard time switchover after 6 days
1	1	Daylight saving time is active
0	1	Standard time to DST switchover after 6 days

For more details contact:
Standards and Measurements Division
Communication Research Laboratory, 2 – 1, Nukui-kitamachi 4, Chome, Koganei-shi, Tokyo 184, Japan

Protocol : JJY60

Position : Fuji Vil., Saga Pref. , Japan
Carrier Frequency : 60kHz
Modulation : 90%
Transmit Power : 50kW at 45% efficiency
Geo. Coordination : 33° 28' N 130° 11' E

Logic Zero : 200mS
Logic One : 500mS
Marker Bits : 800mS

Permanent Transmission

0	1	2	3	4	5	6	7	8	9	10	11	12	13	14	15	16	17	18	19	20	21	22	23	24	25	26	27	28	29
Marker Bit	40 Minutes	20 Minutes	10 Minutes	Always 0	8 Minutes	4 Minutes	2 Minutes	1 Minute	Marker Bit	Always 0	Always 0	20 Hours	10 Hours	Always 0	8 Hours	4 Hours	2 Hours	1 Hour	Marker Bit	Always 0	Always 0	200 Days	100 Days	Always 0	80 Days	40 Days	20 Days	1 Days	Marker Bit
800	200	200	200	200	200	200	200	200	800	200	200	200	200	200	200	200	200	200	800	200	200	200	200	200	200	200	200	200	800
	500	500	500		500	500	500	500				500	500		500	500	500	500				500	500		500	500	500	500	

30	31	32	33	34	35	36	37	38	39	40	41	42	43	44	45	46	47	48	49	50	51	52	53	54	55	56	57	58	59
8 Days	4 Days	2 Days	1 Day	Always 0	Always 0	Even Parity of Hour	Even Parity of Minutes	DST bit1	Marker Bit	DST Bit 2	80 Years	40 Years	20 Years	10 Years	8 Years	4 Years	2 Years	1 Year	Marker Bit	Day of week 4	Day of week 2	Day of week 1	Leap sec. info	Leap sec. info	Reserved	Reserved	Reserved	Reserved	Marker Bit
200	200	200	200	200	200	200	200	200	800	200	200	200	200	200	200	200	200	200	800	200	200	200	200	200	200	200	200	200	800
500	500	500	500		500	500	500	500		500	500	500	500	500	500	500	500	500		500	500	500	500		500	500	500	500	

Summer Winter Changeover

DST Bit1	DST Bit2	Description
0	0	Standard time is active
1	0	DST to Standard time switchover after 6 days
1	1	Daylight saving time is active
0	1	Standard time to DST switchover after 6 days

For more details contact:
Standards and Measurements Division
Communication Research Laboratory, 2 – 1, Nukui-kitamachi 4, Chome, Koganei-shi, Tokyo 184, Japan

Protocol : HBG

Position : Prangins / Switzerland
Carrier Frequency : 75kHz
Modulation : 75%
Transmit Power : 20kW
Geo. Coordination : 46° 24'N, 06° 15'E

Logic Zero : 100mS
Logic One : 200mS
Marker Bit : 000mS

Permanent Transmission

0	1	2	3	4	5	6	7	8	9	10	11	12	13	14	15	16	17	18	19	20	21	22	23	24	25	26	27	28	29
Reserved	Reserved	Reserved	Reserved	Reserved	Reserved	Reserved	Reserved	Reserved	Reserved	Reserved	Reserved	Reserved	Reserved	Reserved	Rev. Antenna	DST Changeover	DST identity	Winter identity	Leap Second	Starting Bit	1 Minute	2 Minutes	4 Minutes	8 Minutes	10 Minutes	20 Minutes	40 Minutes	Minutes 0 Parity	1 Hour
100	100	100	100	100	100	100	100	100	100	100	100	100	100	100	100	100	100	100	100	200	100	100	100	100	100	100	100	100	100
															200	200	200	200	200		200	200	200	200	200	200	200	200	200

30	31	32	33	34	35	36	37	38	39	40	41	42	43	44	45	46	47	48	49	50	51	52	53	54	55	56	57	58	59
2 Hours	4 Hours	8 Hours	10 Hours	20 Hours	Hours 0 Parity	1 Day	2 Days	4 Days	8 Days	10 Days	20 Days	Day of week 1	Day of week 2	Day of week 4	1 Month	2 Months	4 Months	8 Months	10 Months	1 Year	2 Years	4 Years	8 Years	10Years	20 Years	40 Years	80 Years	Parity Day, DoW & Month	Marker Bit
100	100	100	100	100	100	100	100	100	100	100	100	100	100	100	100	100	100	100	100	100	100	100	100	100	100	100	100	100	000
200	200	200	200	200	200	200	200	200	200	200	200	200	200	200	200	200	200	200	200	200	200	200	200	200	200	200	200	200	

Summer Winter Changeover

Bit 16	Bit 17	Bit2 18	Description
0	0	1	Standard time is active (winter time)
1	0	1	Hour before DST to Standard time switchover
0	1	0	Daylight saving time is active
1	1	0	Hour before Standard time to DST switchover

For more details contact:
Swiss Federal Office of Metrology and Accreditation (METAS)
Lindenweg 50
CH-3003 Bern-Wabern, Switzerland
http://metas.ch